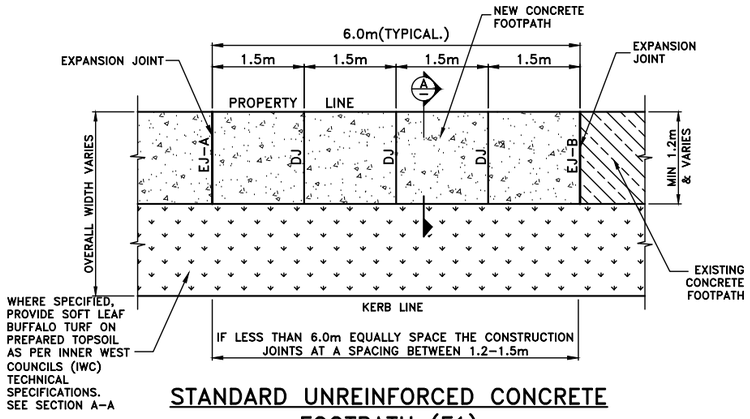

STANDARD UNREINFORCED CONCRETE FOOTPATH (F1)

SCALE 1:100

TABLE 1	LANDSCAPED TREE PIT PLANTING SCHEDULE		
LEGEND	SPECIES	SPACING	POT SIZE
	GAZANIA TOMENTOSA OR DICHONDRA REPENS OR OTHER SIMILAR LANDSCAPED GROUNDCOVER SPECIES APPROVED BY COUNCIL'S SUSTAINABLE STREET OFFICER	0.8m CTS	140mm dia.

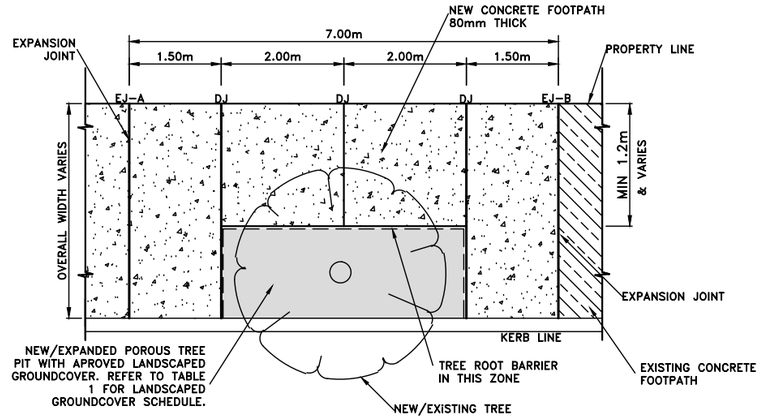

F1 PATH: CONCRETE FOOTPATH – TYPICAL DETAIL (AROUND TREE PIT)

NEW/EXISTING TREE IN POROUS TREE PIT
SCALE 1:100

NOTE
FOR FOOTPATHS WITH EXISTING TREES, TRIPSTOPS OR APPROVED SIMILAR TO BE USED AT JOINTS–SEE PLAN F2.

WORK METHOD STATEMENT FOR NEW CIVIC GARDEN LANDSCAPE AREA WITH NEW TREE:–

- SUBGRADE TO BE CULTIVATED AND COMPACTED TO MINIMUM DEPTH OF 100mm
- PLANTING AREAS TO BE EXCAVATED TO A MINIMUM DEPTH OF 300mm BELOW EXISTING FOOTPATH SURFACE LEVEL (EXCEPT 0.5M EXCLUSION ZONE AROUND TREE (BE CAREFUL NOT TO CAUSE DAMAGE TO TREE ROOTS)
- SPRAY AREA WITH HERBICIDE (EG: ROUNDUP OR BIO 180 AS AGREED WITH COUNCIL)
- IN LOCATIONS OF NEW PLANTS, ADD 300mm OF PREMIUM GRADE GARDEN SOIL.
- PLANT OUT LANDSCAPE AREA WITH PLANTS AS SPECIFIED.
- EUCI MULCH LAYER MINIMUM 75mm DEPTH IS TO BE SPREAD THROUGHOUT ALL PLANTING AREA.
- GARDEN AREA TO BE WATERED TWICE A WEEK BY THE CONTRACTOR FOR 3 MONTHS, OR AS REQUIRED TO MAINTAIN A HEALTHY GARDEN.

WORK METHOD STATEMENT FOR NEW CIVIC GARDEN LANDSCAPE AREA WITH EXISTING TREE:–

- DIG OUT 75MM DEPTH (EXCEPT 0.5M EXCLUSION ZONE AROUND TREE (BE CAREFUL NOT TO CAUSE DAMAGE TO TREE ROOTS)
- SPRAY AREA WITH HERBICIDE (EG: ROUNDUP OR BIO 180 AS AGREED WITH COUNCIL)
- IN LOCATIONS OF NEW PLANTS, LIGHTLY SCARIFY & LOOSEN SOIL (MIN 50MM), ADD COMPOST AND WORK INTO EXISTING SOIL.
- PLANT OUT LANDSCAPE AREA WITH PLANTS AS SPECIFIED.
- EUCI MULCH LAYER IS TO BE SPREAD THROUGHOUT ALL PLANTING AREA.
- GARDEN AREA TO BE WATERED TWICE A WEEK BY THE CONTRACTOR FOR 3 MONTHS, OR AS REQUIRED TO MAINTAIN A HEALTHY GARDEN.

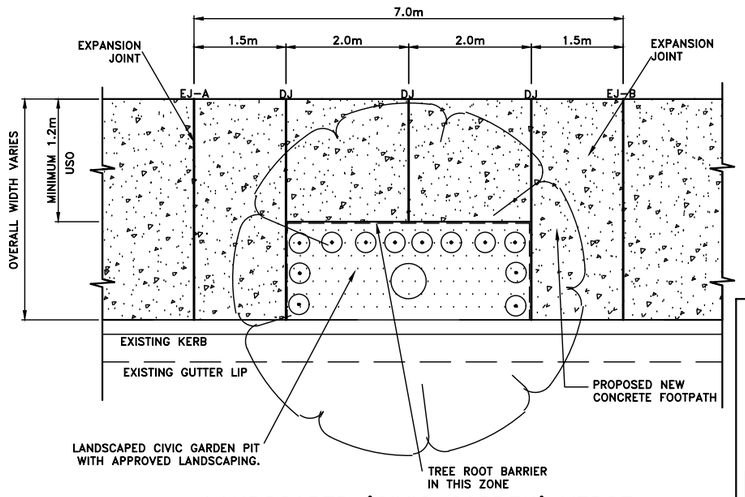

LANDSCAPED 'CIVIC GARDEN' VERGE (TYPICAL DETAIL)

SCALE 1:100

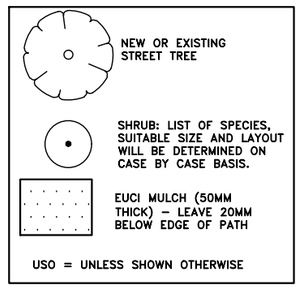

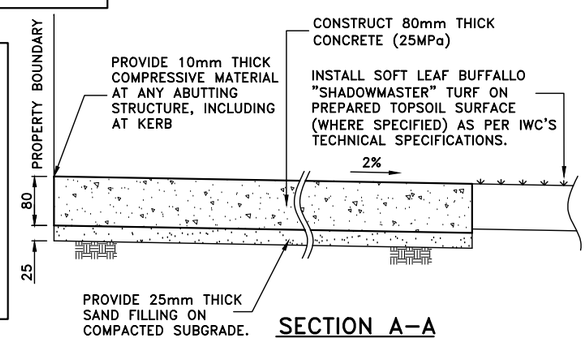

SECTION A–A

SCALE 1:10

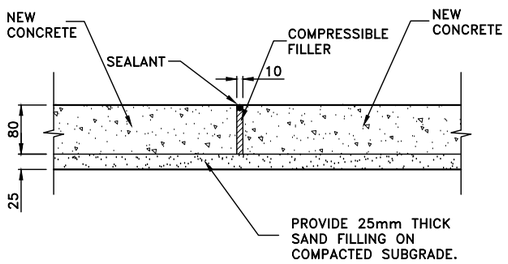

EXPANSION JOINT A (EJ–A)

SCALE 1:10

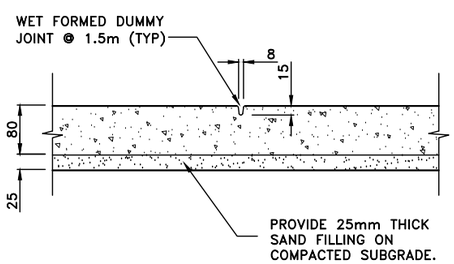

DUMMY JOINT (DJ)

SCALE 1:10

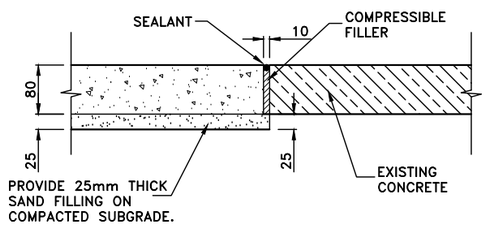

EXPANSION JOINT B (EJ–B)

SCALE 1:10

(ORIGINAL = A3 SHEET)

FOOTPATH NOTES 1:

1. CONCRETE STRENGTH
- A) KERB, KERB & GUTTER, FOOTPATH, CYCLEWAY, VEHICLE CROSSING, PRAM RAMP, EDGE STRIP: 25MPA @ 28 DAYS
- B) DISH CROSSING, ROAD PLATFORM/HUMP, ROAD SLAB: 40MPA @ 28 DAYS
- C) FOR TRAFFICKED AREAS WHERE FACILITY MUST BE OPEN TO TRAFFIC WITHIN 12 HOURS (EG VEHICLE CROSSING, ROAD SLAB, DISH CROSSING, ROAD PLATFORM/HUMP: 40 MPA WITH ACCELERATOR SUCH AS 2% CACL (REFER TO SP40HC).
- D) FOR COLOURED OR DECORATIVE CONCRETE FINISHES A MINIMUM OF 32–MPA CONCRETE SHOULD BE USED

2. CONCRETE FINISH
- A) KERB, GUTTER, LAYBACK, DISH CROSSING, PIT (OUTER EXPOSED) – STEEL TROWEL
- B) VEHICLE CROSSINGS, FOOTPATH, CYCLEWAY, ROAD SLABS, PRAM RAMP, ROAD HUMPS/RAMPS – BROOM/BRUSH.

3. REINFORCEMENT
- A) TO AS 4671.
- B) MINIMUM COVER: 50MM

4. JOINTING AND MINIMUM DIMENSIONS
- A) ANY RECONSTRUCTED SECTION OF CONCRETE SHALL HAVE A MINIMUM DIMENSION OF 900MM IN ANY DIRECTION.
- B) ALL JOINTS SHALL BE AT RIGHT ANGLES UNLESS DIRECTED OTHERWISE BY THE COUNCIL ENGINEER.
- C) EXPANSION JOINTS (UNREINFORCED CONCRETE): 10MM APPROVED BITUMEN FILLER AT MAXIMUM 10M INTERVALS.
- D) EXPANSION JOINTS (REINFORCED CONCRETE): 10MM APPROVED BITUMEN FILLER AT MAXIMUM 12M INTERVALS, WITH 12MM DIA DEFORMED HOT DIPPED GALVANISED DOWELS, 600MM LONG, AT 500MM CENTRES WITH UPVC SLEEVE AND LEG – MINIMUM 2 DOWELS/JOINT, WITH NO DOWEL CLOSER THAN 150MM TO A VERTICAL EDGE. 'CONNELLY' JOINTS OR EQUIVALENT MAY BE USED.ALL DOWELS SHALL BE PERFECTLY ALIGNED IN PLAN VIEW AND IN ELEVATION, IE THE DOWELS SHALL NOT BE SPLAYED RELEVANT TO EACH OTHER.
- E) ALL EXPANSION JOINT MATERIAL SHALL BE THE SAME THICKNESS OF THE CONCRETE AND BE IN ONE LENGTH & WIDTH.
- F) AT ALL EXPANSION JOINTS, ANY 'SPILL' CONCRETE FROM THE PREVIOUS POUR (IE SEPARATE TO THE FINISHED CONCRETE) SHALL BE REMOVED.
- G) CONTRACTION/DUMMY JOINTS (UNREINFORCED CONCRETE) – EQUALLY BETWEEN EXPANSION JOINTS BUT NOT LESS THAN THE CONCRETE WIDTH BETWEEN JOINTS/EDGES AND NOT MORE THAN 1.5 TIMES THE WIDTH OF FOOTPATH.

5. EXCAVATION
- A) AT ALL JOINS TO EXISTING CONCRETE/ASPHALT – THE JOIN SHALL BE SAW CUT BEFORE EXCAVATION.
- B) ALL EXCAVATED MATERIAL SHALL BE REMOVED FROM THE SITE AND DISPOSED OF AT A LICENSED WASTE DISPOSAL FACILITY.

6. UTILITIES, SERVICES & SURVEY MARKS
- A) ALL UNDERGROUND UTILITY SERVICES SHALL BE CHECKED FOR LEVEL AND LOCATION PRIOR TO COMMENCEMENT OF WORKS, BY THE CONTRACTOR.
- B) ALL SERVICE COVERS AFFECTED BY THE WORKS SHALL BE ADJUSTED AS REQUIRED AND TO SUIT THE LEVELS OF THE NEW WORK. NO SERVICE FITTINGS SHALL BE COVERED.
- C) PROPERTY STORMWATER PIPES: WHERE AFFECTED, SHALL BE REPLACED WITH 90MM UPVC OR TO SUIT EXISTING AND INVERT SHALL MATCH THE GUTTER LEVEL.
- D) STATE SURVEY MARKS (SSM'S) – SHALL NOT BE DISTURBED UNLESS APPROVED BY THE COUNCIL ENGINEER.
- E) AT ALL LIGHT/POWER POLES, THE CONCRETE SHALL BE ENDED 150MM CLEAR OF THE POLE AND THE GAP FILLED WITH 30MM OF 10MM COLDMIX/ASPHALTIC CONCRETE.

7. NATURE STRIP RESTORATION
- A) MATCH EXISTING TURF.
- B) IF NEW TURF IS SPECIFIED – USE SOFT LEAF BUFFALO "SHADEMASTER", LAID ON 100MM THICK PREPARED TOPSOIL, OR AS SPECIFIED BY THE COUNCIL ENGINEER.

8. EXISTING SIGNAGE
- A) SUCH SIGNAGE SHALL BE REINSTATED UNLESS THE COUNCIL ENGINEER ADVISES OTHERWISE.
- B) SIGNS REPLACED OR NEW, WITHIN THE NEW CONCRETE SHALL BE INSTALLED WITH A V–LOK.
- C) HERITAGE STREET NAME SIGNS EMBEDDED IN FOOTPATH PAVING AND KERBS – CAUTION SHALL BE EXERCISED TO NOT DAMAGE THESE SIGNS AND THE CONTRACTOR SHALL LIAISE WITH THE COUNCIL ENGINEER TO DETERMINE WHAT ACTION TO IMPLEMENT WHERE DISTURBANCE OF THE SIGN IS ESSENTIAL.

9. RESIDENT NOTIFICATION
- A) ALL RESIDENTS AFFECTED BY THE WORKS SHALL BE NOTIFIED AT LEAST 2 WORKING DAYS BEFORE THE RELEVANT WORK COMMENCES AND ANY REASONABLE REQUESTS ACCOMMODATED.

10. SAFETY/SIGNAGE/ACCESS
- A) DURING CONSTRUCTION, ADEQUATE WARNING SIGNS AND BARRICADING SHALL BE PROVIDED TO ENSURE THAT THE WORK SITE MEETS THE REQUIREMENTS OF AS 1742.2 & 1743.3, AND TO PROVIDE ADEQUATE PROTECTION TO PEDESTRIANS & MOTORISTS.
- B) ADEQUATE AND SAFE ACCESS FOR PEDESTRIANS SHALL BE PROVIDED AT ALL TIMES.
- C) AT DRIVEWAYS – PREVENTION OF ACCESS SHALL BE KEPT TO AN ABSOLUTE MINIMUM AND ARRANGEMENTS SHALL BE MADE WITH THE RESIDENT/BUSINESS, BY THE CONTRACTOR, FOR A SUITABLE DAY/TIME FOR THIS WORK. USE OF HIGHER STRENGTH CONCRETE, WITH SHORTER CURING TIME MAY BE NECESSARY.

11. DIMENSIONS
- A) ALL DIMENSIONS ARE IN MILLIMETRES UNLESS SHOWN OTHERWISE.

12. GENERAL
- A) ALL WORKS SHALL BE CARRIED OUT TO COUNCIL'S SPECIFICATION, TO BEST PRACTICE STANDARDS, AND TO THE SATISFACTION OF COUNCIL'S SUPERVISING ENGINEER.
- B) DURING AND AFTER EXCAVATION, ANY UNSOUND AREAS BELOW THE CONCRETE WORK SHALL BE DRAWN TO THE COUNCIL ENGINEER'S ATTENTION, TO ESTABLISH IF ANY ADDITIONAL EXCAVATION/ BASE COURSE IS NECESSARY.
- C) THE WORK SITE SHALL BE KEPT IN A CLEAN, TIDY, AND SAFE CONDITION AT ALL TIMES AND TO THE SATISFACTION OF COUNCIL'S ENGINEER.

13. DOCUMENT PRIORITY
- A) THIS PLAN SUPERSEDES ANY STATEMENTS ON OTHER DOCUMENTS, EG SPECIFICATIONS, OTHER PLANS, ETC, UNLESS ADVISED BY THE COUNCIL ENGINEER.

14. INSPECTIONS

INSPECTIONS BY THE COUNCIL SUPERVISING ENGINEER SHALL BE REQUIRED AT THE FOLLOWING STAGES AND AS OTHERWISE DIRECTED BY THE COUNCIL ENGINEER:
- A) EXCAVATION COMPLETED, SUBGRADE PREPARED AND SAND PLACED.
- B) ROAD BASE PLACED AND COMPACTED,WHERE APPLICABLE.
- C) FORMWORK AND REINFORCEMENT SET.
- D) CONCRETE POURED AND CURED.
- E) COMPLETED.

NOTE:
WHERE NEW TREES ARE INSTALLED – PROVIDE TREE ROOT BARRIER SURE GRO TYPE RB600H OR SIMILAR APPROVED TO MANUFACTURERS SPECIFICATION.

CHECKED & APPROVED	SURVEYED & DRAFTED	QUANTITIES	SERVICES AFFECTED	S.R.A. / SURV. GEN.	SERVICES	DATUM				INNER WEST COUNCIL	FILE NO. / SHEET NO.
				R.T.A.	TELECOM/OPTUS —T—T—T—T—	A. H. D.				STANDARD FOOTPATH DRAWING – F1	PLAN NO.
APPROVED FOR CONSTRUCTION	DESIGNED PG/DJT MAY 2019	INNER WEST COUNCIL		A.G.L. / SHELL PIPELINES	GAS —G—G—G—G—	SCALES				80mm THICK UNREINFORCED CONCRETE FOOTPATH	F1
	DRAWN PG/DJT MAY 2019			SYDNEY WATER	SEWER —S—S—S—S—	AS SHOWN					VERSION V1
				TELSTRA / OPTUS	WATER —W—W—W—W—						
				SYDNEY ELECTRICITY	RAILWAY —R—R—R—R—						
				NOTICE OF ENTRY	ELEC. CABLES —E—E—E—E—						
				KERB & GUTTER	OIL PIPELINES —P—P—P—P—						
				NOTICES / DATE	STORM WATER —SW—SW—SW—		AMEND / DATE / DESCRIPTION		APPROV.		